aegis
CONNECTION TOGETHER

AVP-EN2K-101

AVP-DE2K-101

1080P HDMI over IP Encoder/Decoder

USER MANUAL

Version: 201006V1.1

Important Safety Instructions

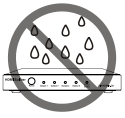

1. Do not expose this apparatus to rain, moisture, dripping or splashing and that no objects filled with liquids, such as vases, shall be placed on the apparatus.

6. Clean this apparatus only with dry cloth.

2. Do not install or place this unit in a bookcase, built-in cabinet or in another confined space. Ensure the unit is well ventilated.

7. Unplug this apparatus during lightning storms or when unused for long periods of time.

3. To prevent risk of electric shock or fire hazard due to overheating, do not obstruct the unit's ventilation openings with newspapers, tablecloths, curtains, and similar items.

8. Protect the power cord from being walked on or pinched particularly at plugs.

4. Do not install near any heat sources such as radiators, heat registers, stoves, or other apparatus (including amplifiers) that produce heat.

9. Only use attachments / accessories specified by the manufacturer.

5. Do not place sources of naked flames, such as lighted candles, on the unit.

10. Refer all servicing to qualified service personnel.

Warnings of FCC

This equipment has been tested and found to comply with the limits for a Class B digital device, pursuant to Part 15 of the FCC Rules. These limits are designed to provide reasonable protection against harmful interference in a residential installation. This equipment generates uses and can radiate radio frequency energy and, if not installed and used in accordance with the instructions, may cause harmful interference to radio communications. However, there is no guarantee that interference will not occur in a particular installation. If this equipment does cause harmful interference to radio or television reception, which can be determined by turning the equipment off and on, the user is encouraged to try to correct the interference by one or more of the following measures:

-- Reorient or relocate the receiving antenna.

-- Increase the separation between the equipment and decoder.

-- Connect the equipment into an outlet on a circuit different from that to which the decoder is connected.

-- Consult the dealer or an experienced radio/TV technician for help.

Changes or modifications not expressly approved by the party responsible for compliance could void the user's authority to operate the equipment.

Table of Contents

Introduction

aegis 1080P over IP includes H.264 IP encoder (AVP-EN2K-101) and decoder (AVP-DE2K-101) can work together to provide complete end-to-end streaming systems. Video, audio, IR, USB and RS232 signals can be routed together or separately throughout the matrix system. They can also function video wall up to the dimensions of 16 x 16 with input and output HDMI resolutions supported up to 1920 x 1080@60Hz.

They can also be powered through PoE. They provides simple, flexible control options, including RS232, IP control box (AVP-CBS2-101), Windows software HDMIOverIPConsole (for system configuration), iPad software AGS-i Touch and Windows software MaintainTool (for firmware upgrade). The decoder also supports CEC/RS232 control to realize power on and off control on displays. They offer solutions for conference rooms, shopping malls, hotels, monitoring centers, schools and corporate training environments, etc.

Features

- Stream HDMI/RS232/IR/USB/ HID signal over IP networks.
- Encoder supports resolutions up to 1920 x 1080@60Hz.
- Decoder offers auto scaler with output resolutions supported from 480p@60Hz to 1920 x 1080@60Hz scaling based on the EDID of display.
- Able to output two IP streams.
  - One large IP stream supports streaming resolution from 480p@60Hz to 1920 x 1080@60Hz to view a video on the decoder side.
  - The other small one supports streaming resolution 360 x 240@15Hz to easily preview a video on a third party device (e.g. tablet).
- Support video wall up to the dimensions of 16 x 16.
- Available API interface for third party control system integration, offering control through IP control box (AVP-CBS2-101), PC configurator

(HDMIoverIPConsole) and AGS-i Touch on iPad.

- Support audio de-embedding output.
- Support RS232 pass-through between encoder and decoder, or between IP control box and encoder/decoder.
- Support IR pass-through between encoder and decoder, as well as IR pass-through from IP control box to encoder/decoder in global cache IR format.
- Support USB (keyboard/mouse only) pass-through from decoder to encoder.
- Allow video, audio, IR, USB and RS232 signals to be routed together or separately.
- Can work at multicast mode or unicast* mode (configuration on network switch is not required in unicast mode).
- Support EDID import to encoder and EDID export from display to decoder.
- Support CEC one-touch-play and standby commands to power on and off the display.
- Decoder can turn off the output through API when no source is detected.
- Decoder can receive CEC commands from the display and report them to IP control box.
- Support HDCP.
- Configurable encoding bit rate up to 30 Mbps.
- Support fast and seamless switching.
- Support firmware upgrade through Maintain Tool.
- Supports PoE to be powered by power source equipment.
- Support Auto IP (zeroconf) -- automatically generates a dynamic IP address at startup in the absence of a DHCP server.
- Support communications protocols such as HTTP, TCP/IP, Telnet, UDP and IGMP.

***Note**: AVP-CBS2K-101 and AVP-CBS2VW-100 can't work in unicast mode thus in this mode the solution doesn't support multiview and windowing features.

Package Contents

Encoder

- 1 x AVP-EN2K-101 Encoder
- 1 x Power Adapter (12 VDC 1A)
- 1 x Exchangeable US Plug
- 2 x Phoenix Male Connectors (3.5 mm, 3 Pins)
- 2 x Mounting Ears (with Screws)
- 1 x IR Emitter Cable (1.2m)

Decoder

- 1 x AVP-DE2K-101 Decoder
- 1 x Power Adapter (12 VDC 1A)
- 1 x Exchangeable US Plug
- 2 x Phoenix Male Connectors (3.5 mm, 3 Pins)
- 2 x Mounting Ears (with Screws)
- 1 x Broadband IR Receiver (30-50KHz)

Specifications

Encoder

Video	
Input Video Port	1 x HDMI
Input Video Type	HDMI 1.3, HDCP 1.4
Input Resolution	640 x 480@60Hz, 480p@60Hz, 576i@50Hz, 576p@50Hz, 800 x 600@60Hz, 1024 x 768@60Hz, 720p@50Hz, 720p@60Hz, 1280 x 800@60Hz, 1280 x 1024@60Hz, 1360 x 768@60Hz, 1366 x 768@60Hz, 1400 x 1050@60Hz, 1440 x 900@60Hz, 1680 x 1050@60Hz, 1920 x 540@60Hz, 1080i@50Hz, 1080i@60Hz, 1080p@50Hz, 1080p@60Hz
Input Video Signal	0.5~1.2 V p-p
Output Video Port	1 x LAN
Output Video Type	H.264, MJPEG
Output Resolution	• Large IP stream: from 480p@60Hz to 1920 x 1080@60Hz • Small IP stream: 360 x 240@15Hz
Encoding Data Rate	• Large IP stream: Up to 30 Mbps, configurable • Small IP stream: 512 Kbps by default, configurable
End-to-End Time Latency	When works with the AVP-DE2K-101 decoder: • About 80 ms (Low latency mode, from TX to RX) • About 250 ms (High quality mode, from TX to RX)
Video Impendence	100 Ω
Input DDC Signal	5 V p-p (TTL)
Audio	
Input Audio Port	1 x HDMI
Input Audio Format	LPCM/MPEG4 AAC stereo
Output Audio Port	1 x Phoenix connector; 1 x LAN
Output Audio Format	Stereo
Control	
Control Method	IP Control Box (AVP-CBS2K-101), PC configurator (HDMIoverIPConsole), iPad software AGS-i Touch

General	
Operating Temperature	+32°F ~ +113°F (0°C ~ +45°C) 10% ~ 90%, non-condensing
Storage Temperature	-4°F ~ 140°F (-20°C ~ +70°C) 10% ~ 90%, non-condensing
ESD Protection	Human body model: • ±8kV (air-gap discharge) • ±4kV (contact discharge)
Surge Protection	Voltage: ±1 kV
Power Supply	12 V 1 A DC
Power Consumption	6W (Max.)
Product Dimensions (W x H x D)	175 mm x 25 mm x 100.2 mm / 6.9" x 0.98" x 3.94"
Net Weight	0.50kg / 1.1lbs

Decoder

Video	
Input Video Port	1 x LAN
Input Video Type	H.264
Input Resolution	From 480p@60Hz to 1920x1080@60Hz
Output Video Port	1 x HDMI
Output Video Type	HDMI 1.3, HDCP 1.4
Output Resolution	480p@60Hz, 576P@50Hz, 800 x 600@60Hz, 1024 x 768@60Hz, 720p@50Hz, 720p@60Hz, 1280 x 800@60Hz, 1280 x 1024@60Hz, 1366 x 768@60Hz, 1440 x 900@60Hz, 1680 x 1050@60Hz, 1920 x 540@60Hz, 1080p@24Hz, 1080p@25Hz, 1080p@30Hz, 1080p@50Hz, 1080p@60Hz, 1920 x 1200@60Hz
Video Impendence	100 Ω
End-to-End Time Latency	When works with AVP-EN2K-101 encoder: • About 80 ms (Low latency mode, from TX to RX) • About 250 ms (High quality mode, from TX to RX)
Audio	
Input Audio Port	1 x LAN
Input Audio Format	LPCM/MPEG4 AAC stereo
Output Audio Port	1 x Phoenix connector; 1 x HDMI
Output Audio Format	Stereo
Control	
Control Method	Front panel button, IP Control Box (AVP-CBS2K-101), PC configurator (HDMIoverIPConsole), iPad software AGS-i Touch

General	
Operating Temperature	+32°F ~ +113°F (0°C ~ +45°C) 10% ~ 90%, non-condensing
Storage Temperature	-4°F ~ 140°F (-20°C ~ +70°C) 10% ~ 90%, non-condensing
ESD Protection	Human body model: • ±8kV (air-gap discharge) • ±4kV (contact discharge)
Surge Protection	Voltage: ±1 kV
Power Supply	12 V 1 A DC
Power Consumption	6W (Max.)
Product Dimensions (W x H x D)	175 mm x 25 mm x 100.2 mm / 6.9" x 0.98" x 3.94"
Net Weight	0.50kg/1.1lbs

Panel Description

Encoder

Front Panel

No.	Name	Description
1	Power LED	• On: The device is powered on. • Off: The device is powered off.
2	Status LED	• On: The device detects valid signal input. • Blinking: The device detects no signal input. • Off:The device is powered off or in the boot process.

Rear Panel

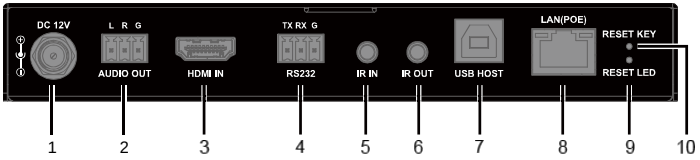

No.	Name	Description
1	DC 12V	Connect to the power adapter provided.
2	Audio Out	Connect to an audio decoder such as an amplifier for audio de-embedding output from HDMI source.
3	HDMI In	Connect to an HDMI source device.
4	RS232	Connect this port to a RS232 device such as a computer to bi-directionally communicate with a RS232 device at the IP control box or decoder side.
5	IR In	Connect to the broadband IR receiver cable.
6	IR Out	Connect to the IR emitter cable.
7	USB Host	Connect to the USB host device.
8	LAN (PoE)	Connect to a network switch for IP streaming output and device control. **Note:** The encoder and decoder can be powered by either a PoE-enabled network switch via this port or power adapters.
9	Reset LED	Reset key is used to reset device. Use a pointed stylus to press and hold this key for more than five seconds until the Reset LED lights up, release this key, the device reboots and restores to its factory default.
10	Reset Key	

Decoder

Front Panel

No.	Name	Description
1	Power LED	• On: The device is powered on. • Off: The device is powered off.
2	Status LED	• On: The device is receiving IP stream. • Blinking: The device doesn't receive IP stream. • Off: The device is powered off or in the boot process.
3	USB 1-2	Connect to USB devices (e.g. keyboard, mouse)
4	ID Key	• Short press the ID key to show the information of encoder and decoder (e.g. device's IP mode, IP address and MAC address) on the display. • Press and hold the key for more than 2 seconds to switch to the next encoder with a greater MAC address in turn.

Rear Panel

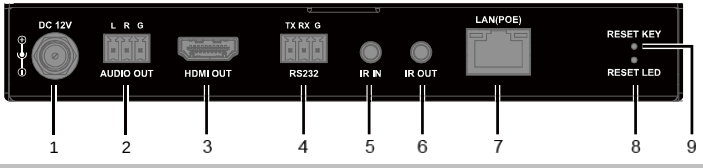

No.	Name	Description
1	DC 12V	Connect to the power adapter provided.
2	Audio Out	Connect to an audio decoder such as an amplifier for audio de-embedding output from HDMI source.
3	HDMI Out	Connect to an HDMI display device.
4	RS232	Connect this port to a RS232 device to bidirectionally communicate with a RS232 device at the IP control box or encoder side.
5	IR In	Connect to the broadband IR receiver cable.
6	IR Out	Connect to the IR emitter cable.
7	LAN (POE)	Connect to a network switch for IP streaming input and

No.	Name	Description
		device control. **Note:** The encoder and decoder can be powered by either a PoE-enabled network switch via this port or power adapters.
8	Reset LED	Use a pointed stylus to press and hold this key for more than five seconds until the Reset LED lights up, release this key, the device reboots and restores to its factory default.
9	Reset Key	

Installation

Note: Before installation, please ensure the device is disconnected from the power source.

Steps to install the device in a suitable location:

1. Attach the mounting bracket to the enclosure using the screws provided in the package separately. The bracket is attached to the enclosure as shown.

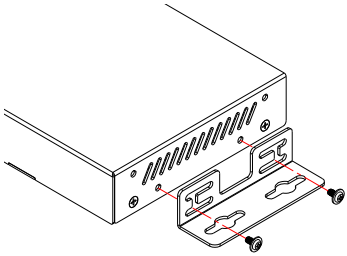

2. Repeat step 1 for the other side of the device.
3. Attach the brackets to the surface you want to hold the unit against using the screws (provided by others).

Applications

IP Matrix

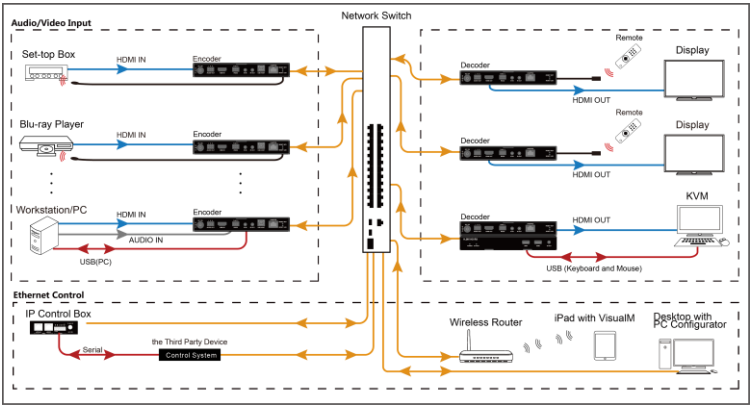

Video Wall

You can use encoders and decoders to build a M x N video wall with PC configurator and IP control box. M, N is an integer ranging from 1 to 16.

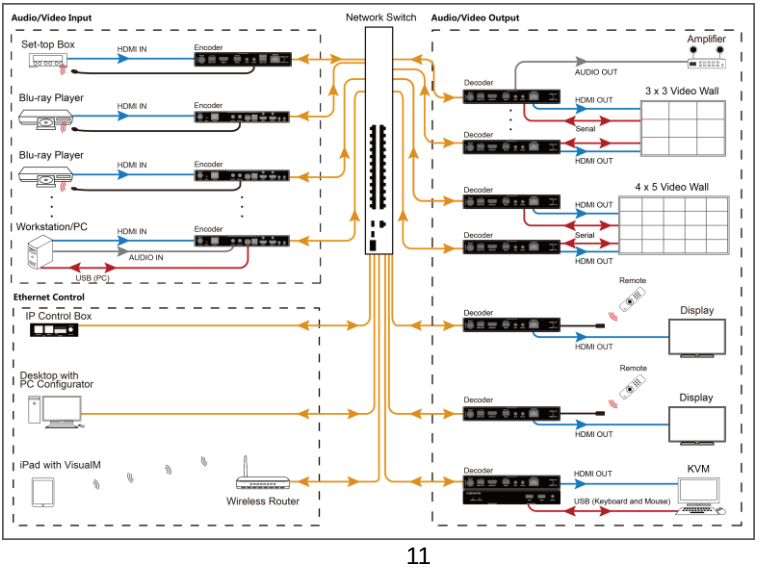

Hardware Installation

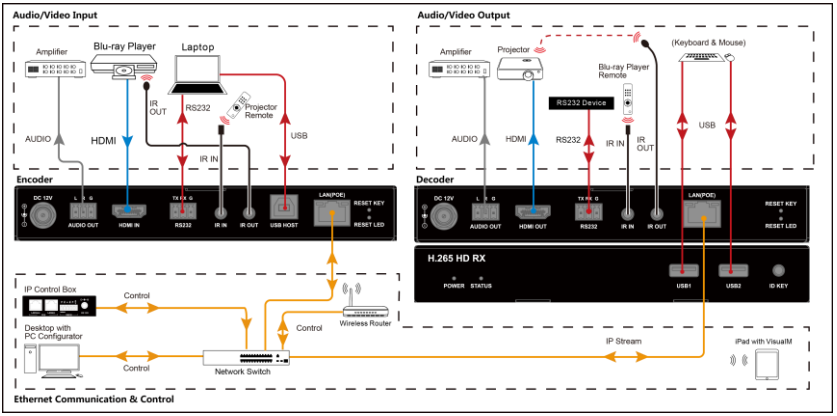

Note:

- Before the installation, disconnect the power supplies from all the devices.
- If the switch doesn't support PoE function or is unable to provide enough power, connect encoder and decoder to power supplies.

Device Control

The encoder and decoder allow you to use PC configurator (HDMIoverIPConsole), AGS-i Touch and IP control box for controlling them. This section briefly introduces how to route the video from source to the display using these tools. By default, audio, video, IR and RS232 signals are routed together. For more information, see their guides.

The following tables describes how audio, video, IR, USB and RS232 signals are routed using different tools.

Control Tools	Description
PC configurator	Route audio, video, IR, USB and RS232 signals together.
AGS-i Touch	
IP Control box	Both of the following routing policies are available. • By default, route audio, video, IR, USB and RS232 signals together. Route audio, video, IR and RS232 signals separately via API commands from IP control box.

Note: For more information about above tools, see their guides.

Firmware Upgrade

You can use MaintainTool to upgrade the encoders and decoders to their latest versions to obtain new features. For more information, see the user guide of MaintainTool.